00 10 40 35 30 01 24 25 55

CUT 45

Incassato per effetti di luce Ø45
Recessed for light effects Ø45

DESCRIZONE
DESCRIZONE

Cut è la nuova linea di segnapasso a luce radente nata per creare suggestivi effetti di luce ed ombra. Ideale per dare vita a percorsi luminosi residenziali o pubblici, Cut trova facile collocazione anche a parete o soffitto, rendendosi quasi invisibile ma facendo in modo che la luce e l'atmosfera create siano le protagoniste della scena. Proposto ad una, due o quattro fessure, Cut diventa l'apparecchio ideale per effetti morbidi o d'accento, per installazioni singole o in serie. Il grado di protezione IP67 ed il sistema AcquaStop per la protezione anti-condensa, infine, rendono Cut un prodotto affidabile e sicuro, ideale per suscitare emozioni di luce.

Cut is the new line of steplight born to create suggestive light and shadow effects. Ideal for creating residential or public lighting paths, Cut is easily placed on the wall or ceiling, making it almost invisible but ensuring that the light and atmosphere created are the protagonists of the scene. Offered with one, two or four slots, Cut becomes the ideal device for soft effects or accents, for single installations or in series. The IP67 protection rating and the AcquaStop system for anti-condensation protection make Cut a reliable and safe product, ideal to arouse emotions of light.

INSTALLAZIONE
INSTALLATION

Incasso a terra o parete

Ground or wall recessed

CORPO
BODY

Alluminio da tornitura Serie 6000 anticorodal, per maggiore resistenza alla corrosione

Anticorodal turning aluminum 6000 Series, for greater corrosion resistance

BOX
BOX

Polipropilene (PP) 30% fibra stabilizzata UV GWT750

Polypropylene (PP) 30% fiber UV stabilized GWT750

SCHERMO
SCREEN

Policarbonato trasparente

Transparent polycarbonate

GUARNIZIONI
SEALS

EPDM

EPDM

VERNICIATURA
FINISHING

Polvere poliestere stabilizzata ai raggi UV con trattamento anticorrosione

Anti-corrosive UV stabilized polyester powder

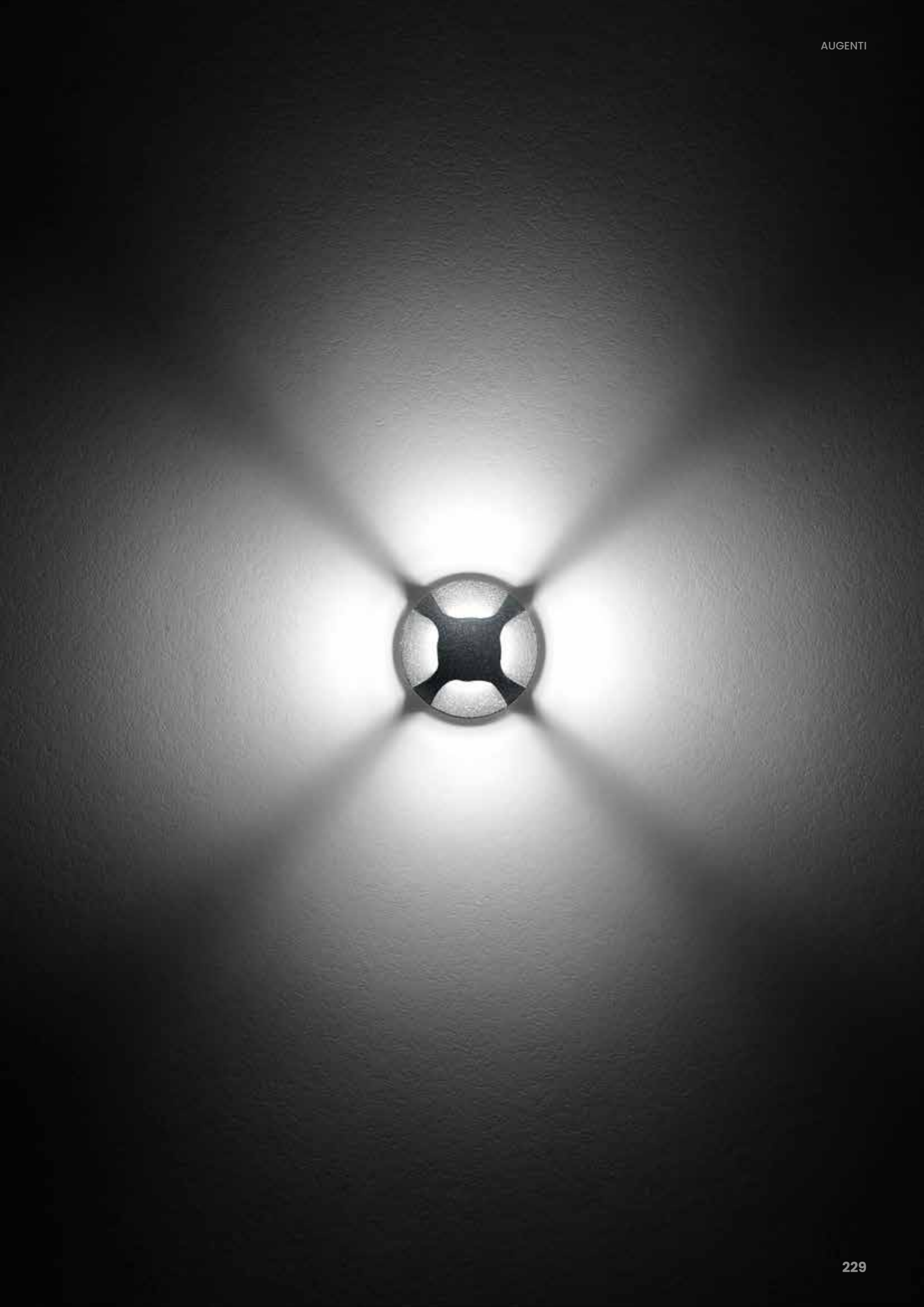

1 FINESTRA
1 WINDOW

4045R/WRRC1L

WATTAGGIO / *WATTAGE* **2W**

INTERASSE APPARECCHI /
DISTANCE BETWEEN FIXTURES **2M**

2 FINESTRE
2 WINDOWS

4045R/WRRC2L

WATTAGGIO / *WATTAGE* **2W**

INTERASSE APPARECCHI /
DISTANCE BETWEEN FIXTURES **2M**

4 FINESTRA
4 WINDOWS

4045R/WRRC4L

WATTAGGIO / *WATTAGE* **2W**

INTERASSE APPARECCHI /
DISTANCE BETWEEN FIXTURES **2M**

CONFIG. CODICE
CODE CONFIG.

▲ → **H=2700K**
W=3000K
N=4000K

VERSIONE IN TENSIONE
CONSTANT VOLTAGE

2W CON DRIVER REMOTO 24Vdc
2W REMOTE DRIVER 24Vdc

VERSIONE IN CORRENTE
CONSTANT CURRENT

2W CON DRIVER REMOTO MAX 700mA DC
2W REMOTE DRIVER MAX 700mA DC

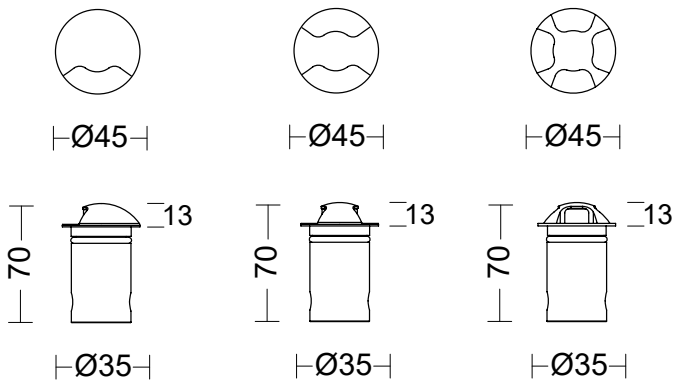

IP 67 | IK 08 | HUB SYSTEM

INCASSO 1 FINESTRA Ø45
24VDC
RECESSED 1 WINDOW Ø45
24VDC

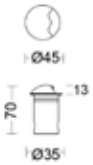

CODICE *CODE*	FASCIO *BEAM*	WATT	SORGENTE *SOURCE*	APPARECCHIO *FIXTURE*	ALIMENTAZIONE *POWER SUPPLY*	CL	IP	IK	CRI
4045R/▲RRC1L	DIFFUSO/1 FINESTRA *DIFFUSED/1 WINDOW*	2W	221 lm	21 lm	24Vdc	III	67	08	80

POLICARBONATO TRASPARENTE - TRANSPARENT POLYCARBONATE

ON/OFF

INCASSO 2 FINESTRE Ø45
24VDC
RECESSED 2 WINDOWS Ø45
24VDC

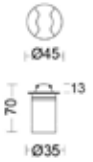

CODICE *CODE*	FASCIO *BEAM*	WATT	SORGENTE *SOURCE*	APPARECCHIO *FIXTURE*	ALIMENTAZIONE *POWER SUPPLY*	CL	IP	IK	CRI
4045R/▲RRC2L	DIFFUSO/2 FINESTRE *DIFFUSED/2 WINDOWS*	2W	221 lm	35 lm	24Vdc	III	67	08	80

POLICARBONATO TRASPARENTE - TRANSPARENT POLYCARBONATE

ON/OFF

INCASSO 4 FINESTRE Ø45
24VDC
RECESSED 4 WINDOWS Ø45
24VDC

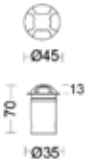

CODICE *CODE*	FASCIO *BEAM*	WATT	SORGENTE *SOURCE*	APPARECCHIO *FIXTURE*	ALIMENTAZIONE *POWER SUPPLY*	CL	IP	IK	CRI
4045R/▲RRC4L	DIFFUSO/4 FINESTRE *DIFFUSED/4 WINDOWS*	2W	221 lm	53 lm	24Vdc	III	67	08	80

POLICARBONATO TRASPARENTE - TRANSPARENT POLYCARBONATE

ON/OFF

ACCESSORI
ACCESSORIES

D.BOX.030.01	CASSAFORMA INTERRATA IN POLIPROPILENE PER RIM/CUT 45 INGROUND POLYPROPYLENE FORMWORK FOR RIM/CUT 45	**E.TRA.632** 1 DRIVER FOR 1-20 LAMPS	ALIMENTATORE ON/OFF 70W 24VDC IP20 DRIVER ON/OFF 70W 24VDC IP20
D.BOX.032.01	CASSAFORMA CORTA IN ALLUMINIO PER RIM/CUT 45 SHORT ALUMINUM FORMWORK FOR RIM/CUT 45	**E.TRA.577** 1 DRIVER FOR 1-8 LAMPS	ALIMENTATORE ON/OFF 25W 24VDC IP67 DRIVER ON/OFF 25W 24VDC IP67
MOR682P/2V	CONNETTORE IP68 2POLI/2VIE 2 X 1 MM² CONNECTOR IP68 2POLES/2WAYS 2 X 1 MM²	**E.TRA.579** 1 DRIVER FOR 9-25 LAMPS	ALIMENTATORE ON/OFF 100W 24VDC IP67 DRIVER ON/OFF 100W 24VDC IP67
E.TRA.631 1 DRIVER FOR 1-5 LAMPS	ALIMENTATORE ON/OFF 15W 24VDC IP20 DRIVER ON/OFF 15W 24VDC IP20	**HUB.24V.001.ND** 1 HUB FOR 1-8 LAMPS	HUB 70W 24VDC IP66 ON/OFF HUB 70W 24VDC IP66 ON/OFF

INCASSO 1 FINESTRA Ø45
MAX 700MA
RECESSED 1 WINDOW Ø45
MAX 700MA

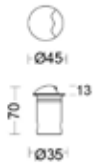

CODICE *CODE*	FASCIO *BEAM*	WATT	SORGENTE *SOURCE*	APPARECCHIO *FIXTURE*	ALIMENTAZIONE *POWER SUPPLY*	CL	IP	IK	CRI
4045R/▲RCC1L	DIFFUSO/1 FINESTRA *DIFFUSED/1 WINDOW*	2W	286 lm	31 lm	max 700mA	III	67	08	80

POLICARBONATO TRASPARENTE - TRANSPARENT POLYCARBONATE

DIMMERABILE - DIMMABLE

INCASSO 2 FINESTRE Ø45
MAX 700MA
RECESSED 2 WINDOWS Ø45
MAX 700MA

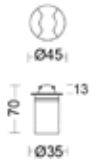

CODICE *CODE*	FASCIO *BEAM*	WATT	SORGENTE *SOURCE*	APPARECCHIO *FIXTURE*	ALIMENTAZIONE *POWER SUPPLY*	CL	IP	IK	CRI
4045R/▲RCC2L	DIFFUSO/2 FINESTRE *DIFFUSED/2 WINDOWS*	2W	286 lm	53 lm	max 700mA	III	67	08	80

POLICARBONATO TRASPARENTE - TRANSPARENT POLYCARBONATE

DIMMERABILE - DIMMABLE

INCASSO 4 FINESTRE Ø45
MAX 700MA
RECESSED 4 WINDOWS Ø45
MAX 700MA

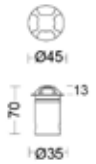

CODICE *CODE*	FASCIO *BEAM*	WATT	SORGENTE *SOURCE*	APPARECCHIO *FIXTURE*	ALIMENTAZIONE *POWER SUPPLY*	CL	IP	IK	CRI
4045R/▲RCC4L	DIFFUSO/4 FINESTRE *DIFFUSED/4 WINDOWS*	2W	286 lm	81 lm	max 700mA	III	67	08	80

POLICARBONATO TRASPARENTE - TRANSPARENT POLYCARBONATE

DIMMERABILE - DIMMABLE

ACCESSORI
ACCESSORIES

D.BOX.030.01	CASSAFORMA INTERRATA IN POLIPROPILENE PER RIM/CUT 45 INGROUND POLYPROPYLENE FORMWORK FOR RIM/CUT 45	**E.TRA.636.700** 1 DRIVER FOR 1-20 LAMPS	ALIMENTATORE CASAMBI 60W 700MA IP20 DRIVER CASAMBI 60W 700MA IP20
D.BOX.032.01	CASSAFORMA CORTA IN ALLUMINIO PER RIM/CUT 45 SHORT ALUMINUM FORMWORK FOR RIM/CUT 45	**E.TRA.658.700** 1 DRIVER FOR 1-12 LAMPS	ALIMENTATORE ON/OFF 23W 700MA IP67 DRIVER ON/OFF 23W 700MA IP67
MOR682P/2V	CONNETTORE IP68 2POLI/2VIE 2 X 1 MM² CONNECTOR IP68 2POLES/2WAYS 2 X 1 MM²	**E.TRA.659.700** 1 DRIVER FOR 1-12 LAMPS	ALIMENTATORE DALI2 23W 700MA IP67 DRIVER DALI2 23W 700MA IP67
E.TRA.621.700 1 DRIVER FOR 1-8 LAMPS	ALIMENTATORE ON/OFF 20W 700MA IP20 DRIVER ON/OFF 20W 700MA IP20	**HUB.700.001.ND** 1 HUB FOR 1-8 LAMPS	HUB 700MA IP66 ON/OFF CON DRIVER 60W IP20 HUB 700MA IP66 ON/OFF WITH DRIVER 60W IP20
E.TRA.623.700 1 DRIVER FOR 1-14 LAMPS	ALIMENTATORE ON/OFF 36W 700MA IP20 DRIVER ON/OFF 36W 700MA IP20	**HUB.700.001.DA2** 1 HUB FOR 1-8 LAMPS	HUB 700MA IP66 DALI-2 CON DRIVER 60W IP20 HUB 700MA IP66 DALI-2 WITH DRIVER 60W IP20
E.TRA.634.700 1 DRIVER FOR 1-20 LAMPS	ALIMENTATORE ON/OFF 60W 700MA IP20 DRIVER ON/OFF 60W 700MA IP20	**HUB.700.001.CA** 1 HUB FOR 1-8 LAMPS	HUB 700MA IP66 CASAMBI CON DRIVER 60W IP20 HUB 700MA IP66 CASAMBI WITH DRIVER 60W IP20
E.TRA.635.700 1 DRIVER FOR 1-20 LAMPS	ALIMENTATORE DALI2 60W 700MA IP20 DRIVER DALI2 60W 700MA IP20		

ACCESSORI
ACCESSORIES

BOX DA INCASSO
RECESSED BOXES

D.BOX.030.01

Cassaforma interrata in polipropilene per Rim/Cut 45
Inground polypropylene formwork for Rim/Cut 45
H 100 x Ø 115

D.BOX.032.01

Cassaforma corta in alluminio per Rim/Cut 45
Short aluminum formwork for Rim/Cut 45
H 80 x Ø 40

CONNETTORI
CONNECTORS

MOR682P/2V

Connettore IP68 2Poli/2Vie 2 x 1 mm²
Connector IP68 2Poles/2Ways 2 x 1 mm²
L 72 x Ø 22

ALIMENTATORI 24Vdc
DRIVER 24Vdc

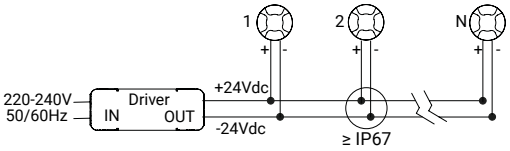

Collegamento in Parallelo
Parallel Wiring

E.TRA.577
1 Driver for 1-8 Lamps

Alimentatore ON/OFF 25W 24Vdc IP67
Driver ON/OFF 25W 24Vdc IP67
L 148 x W 40 x H 32

E.TRA.579
1 Driver for 9-25 Lamps

Alimentatore ON/OFF 100W 24Vdc IP67
Driver ON/OFF 100W 24Vdc IP67
L 140 x W 63 x H 32

E.TRA.631
1 Driver for 1-5 Lamps

Alimentatore ON/OFF 15W 24Vdc IP20
Driver ON/OFF 15W 24Vdc IP20
L 106 x W 33 x H 22

E.TRA.632
1 Driver for 1-20 Lamps

Alimentatore ON/OFF 70W 24Vdc IP20
Driver ON/OFF 70W 24Vdc IP20
L 124 x W 80 x H 22

HUB - SISTEMI DI CONNESSIONE SEMPLIFICATA 24Vdc
HUB - READY TO CONNECT SYSTEM 24Vdc

HUB.24V.001.ND
1 Hub for 1-8 Lamps

Hub 70W 24Vdc IP66 ON/OFF
Hub 70W 24Vdc IP66 ON/OFF
L 235 x W 200 x H 92

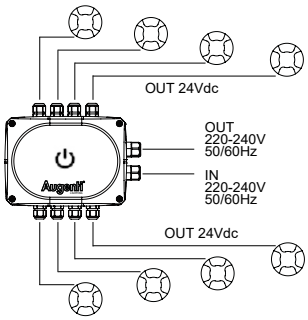

ALIMENTATORI CC - 700mA

DRIVER CC - 700mA

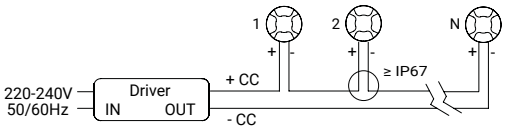

Collegamento in Serie
Series Wiring

E.TRA.621.700
1 Driver for 1-8 Lamps

Alimentatore ON/OFF 20W 700mA IP20
Driver ON/OFF 20W 700mA IP20
L 111 x W 52 x H 22

E.TRA.623.700
1 Driver for 1-14 Lamps

Alimentatore ON/OFF 36W 700mA IP20
Driver ON/OFF 36W 700mA IP20
L 163 x W 30 x H 21

E.TRA.634.700
1 Driver for 1-20 Lamps

Alimentatore ON/OFF 60W 700mA IP20
Driver ON/OFF 60W 700mA IP20
L 124 x W 80 x H 22

E.TRA.635.700
1 Driver for 1-20 Lamps

Alimentatore DALI2 60W 700mA IP20
Driver DALI2 60W 700mA IP20
L 124 x W 80 x H 22

E.TRA.636.700
1 Driver for 1-20 Lamps

Alimentatore CASAMBI 60W 700mA IP20
Driver CASAMBI 60W 700mA IP20
L 124 x W 80 x H 22

E.TRA.658.700
1 Driver for 1-12 Lamps

Alimentatore ON/OFF 23W 700mA IP67
Driver ON/OFF 23W 700mA IP67
L 124 x W 47 x H 26

E.TRA.659.700
1 Driver for 1-12 Lamps

Alimentatore DALI2 23W 700mA IP67
Driver DALI2 23W 700mA IP67
L 124 x W 47 x H 26

HUB - SISTEMI DI CONNESSIONE SEMPLIFICATA CC 700mA

HUB - READY TO CONNECT SYSTEM CC 700mA

HUB.700.001.CA
1 Hub for 1-8 Lamps

Hub 700mA IP66 CASAMBI con driver 60W IP20
Hub 700mA IP66 CASAMBI with driver 60W IP20
L 235 x W 200 x H 92

HUB.700.001.DA2
1 Hub for 1-8 Lamps

Hub 700mA IP66 DALI-2 con driver 60W IP20
Hub 700mA IP66 DALI-2 with driver 60W IP20
L 235 x W 200 x H 92

HUB.700.001.ND
1 Hub for 1-8 Lamps
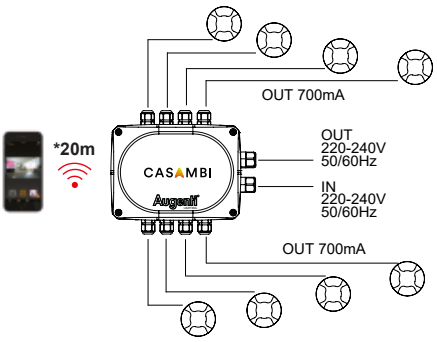
Hub 700mA IP66 ON/OFF con driver 60W IP20
Hub 700mA IP66 ON/OFF with driver 60W IP20
L 235 x W 200 x H 92